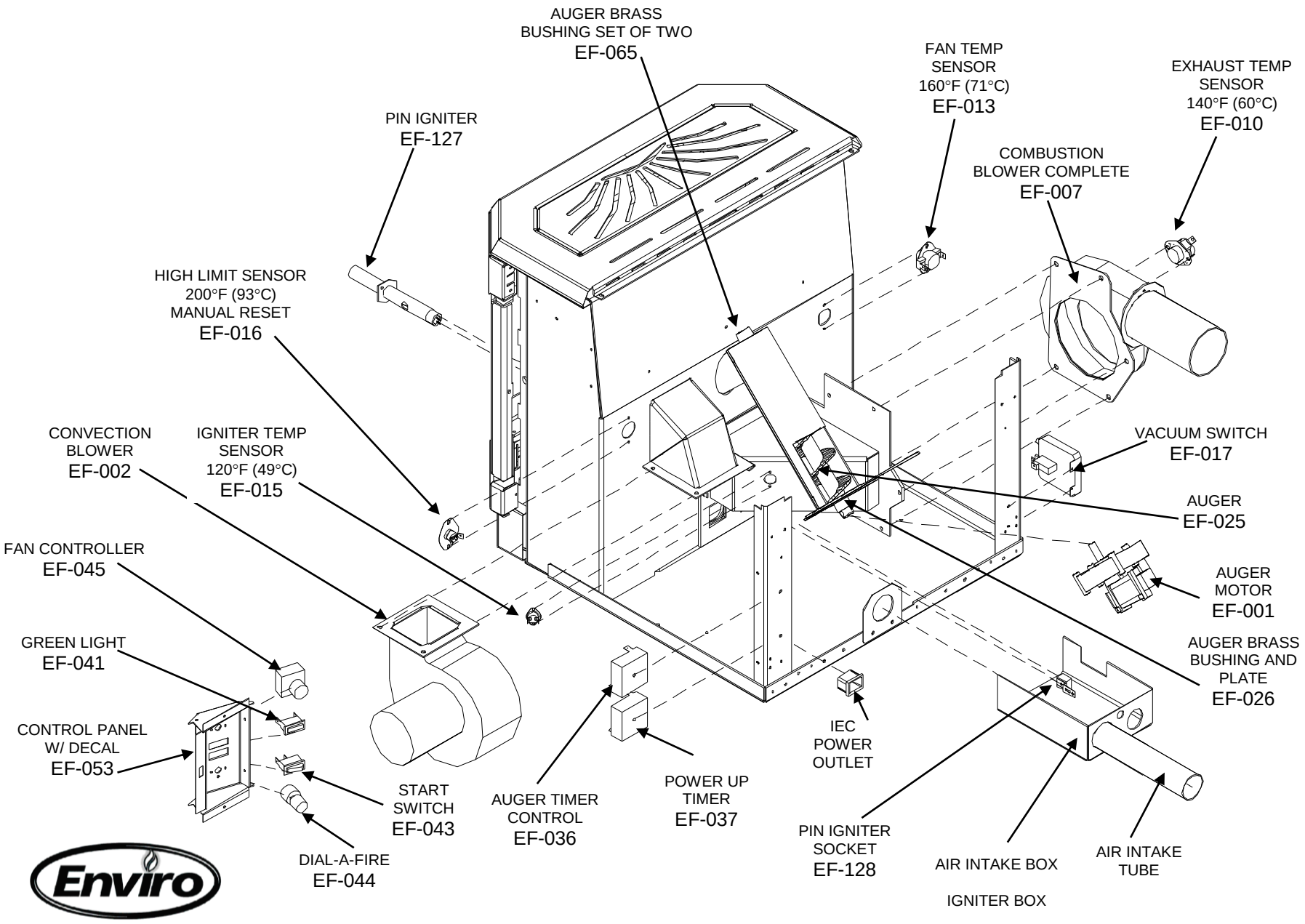

EF III BAY I

EXPLODED (COMPONENTS)