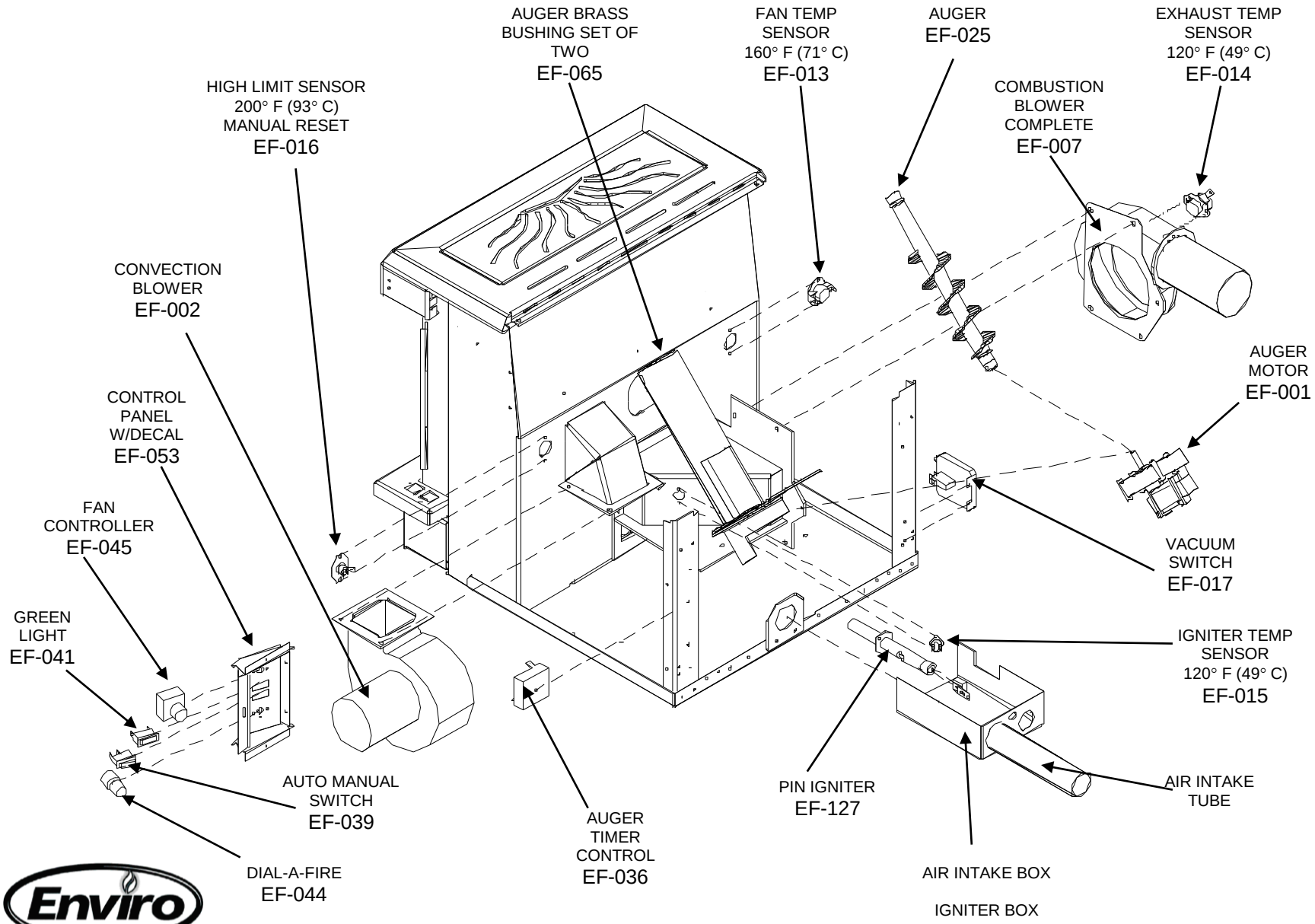

EF II i
EXPLODED (COMPONENTS).
JULY 2001